SH. 1 OF 1	CAT NO 120A-6	CUSTOMER DIMENSIONS	DO NOT SEPARATE PRINT FROM WORK	SIZE	RANGE: 0-6" GRADUATIONS: .001"

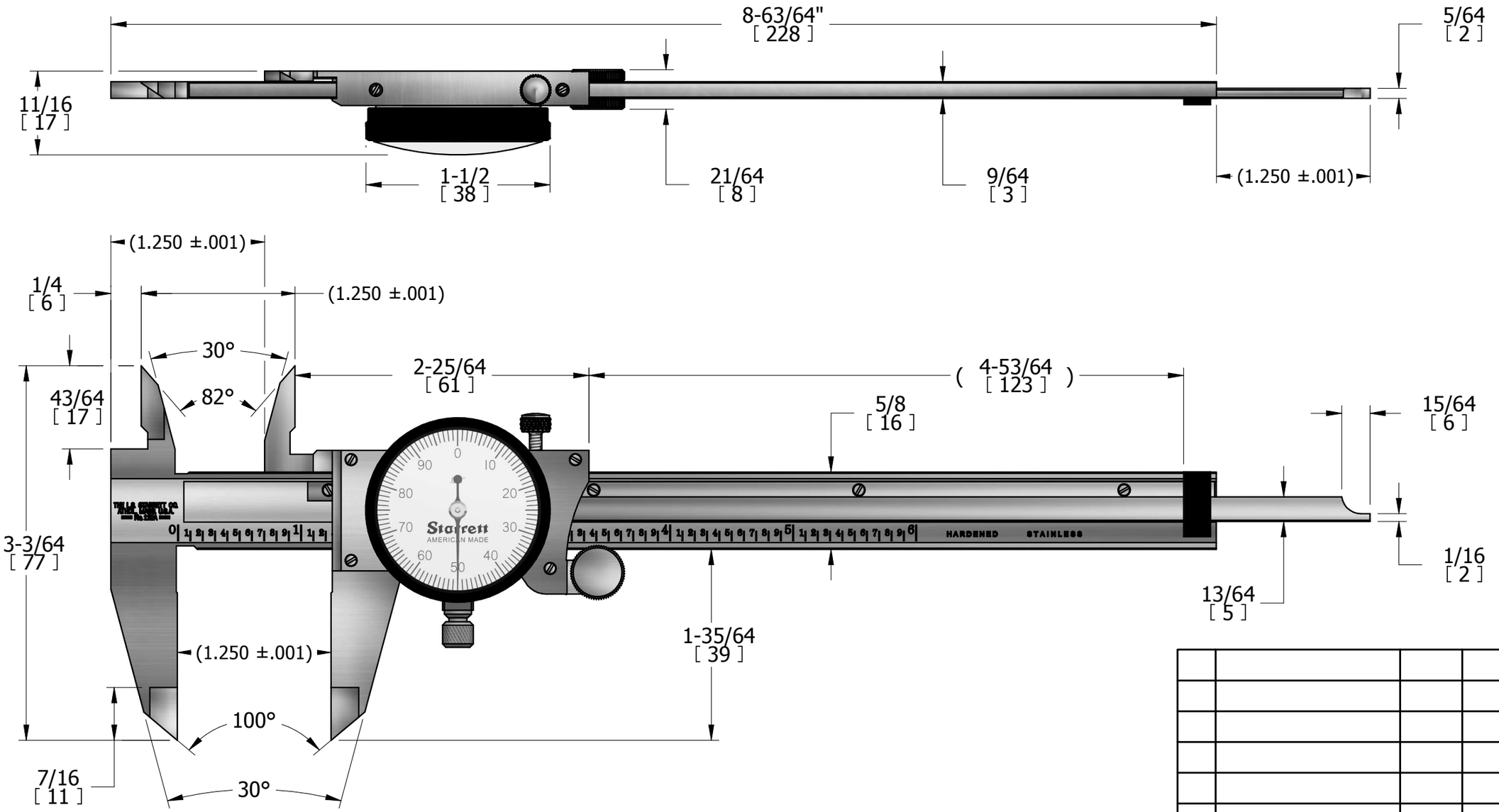

REV	DESCRIPTION	DATE	BY

DR JMR	CHK	DATE 12/14/15

DIAL CALIPER ASSEMBLY

FRACTIONAL TOLERANCE +- 1/64 UNLESS OTHERWISE NOTED

THE L.S. STARRETT CO.
ATHOL, MASS.